scientific reports

OPEN

A two stage multi object tracking algorithm with transformer and attention mechanism

Mingxing Hou[1], Yiming Wu[1], Hong Shi[1] & Xiaofang Mu[2]✉

In the field of engineering safety, multi-object tracking encounters difficulties in effectively conducting object detection due to occlusion, as well as the issue of experiencing frequent switching of target identity ID switches (IDs). In response to the issues above, this paper proposes a multi-object tracking model that integrates improved You Only Look Once Version 8 (YOLOv8) and High-Performance Multi-Object Tracking by Tracking Bytes (ByteTrack). The model architecture is based on the paradigm of tracking-by-detection. In the detection stage, we combine the coordinate attention mechanism to propose the Coordinate Attention Spatial Pyramid Pooling - Fast Conv (CASPPFC) module, and combine it with improved Efficient Vision Transformer (EfficientViT) to enhance the YOLOv8 backbone network, effectively reducing false positives and false negatives caused by occlusion. In the first stage of tracking association, we propose the Omni-Scale Network-Coordinate Attention (OSNet-CA) network as the Re-identification (Re-ID) feature extraction method to capture target information more effectively. In the second stage of association, we adopt the Efficient Intersection over Union (EIoU) improvement method to comprehensively consider the positional relationships between targets. The effectiveness of the improved model is validated on the Multi-Object Tracking 2017 (MOT17) and Multi-Object Tracking 2020 (MOT20) datasets. The results indicate that our tracking model achieved 80.5% Multiple Object Tracking Accuracy (MOTA), 79.3% Identification F1 Score (IDF1), and 64.2% Higher Order Tracking Accuracy (HOTA) on the MOT17 test set, and 77.8% MOTA, 76.9% IDF1, and 62.4% HOTA on the MOT20 test set. This tracking model can achieve high-precision pedestrian tracking, effectively reducing ID switches and enhancing tracking robustness, timely detection of hazardous events in the engineering safety field to ensure personnel safety.

Keywords Multi-object tracking, You Only Look Once Version 8, Attention mechanism, Re-identification, Two-stage association

Multi-object tracking (MOT) is a fundamental problem in the field of computer vision. Its role is to detect and track the positions and motion trajectories of multiple target objects through video or image sequences. MOT finds widespread applications in various fields, including video surveillance, smart cities, and autonomous driving. However, due to significant occlusions between objects in practical scenarios, leading to frequent target identity ID switches, designing high-precision multi-object tracking algorithms is challenging.

In recent years, there have been breakthroughs in deep learning-based multi-object tracking. Research[1–5] based on the joint detection and embedding (JDE)[6] paradigm, utilizes a single neural network for joint detection and embedding, achieving faster speeds. However, the accuracy is compromised due to occlusion issues. To achieve high-precision multi-object tracking, research[7–11] based on the tracking by detection (TBD)[12] paradigm, decomposes the multi-object tracking task into two key steps: object localization and data association. In the object localization stage, an object detector is used to detect the objects of interest frame by frame. In the data association stage, the tracker matches the same objects across adjacent frames based on similarity calculations and the Hungarian algorithm[13], using the available detection data and motion information predicted by Kalman filtering[14]. This process forms object trajectories and assigns unique IDs, enabling effective tracking of the objects. This paper proposes an improved algorithm based on the TBD tracking paradigm, which successfully achieves high-precision pedestrian tracking.

In recent years, some advanced object detection algorithms[15–17] have been proposed. Detectors commonly utilize the YOLO series[18–23] of object detection algorithms, which directly predict the object categories and locations in images through a single neural network model. This approach offers fast speed and high accuracy.

[1]School of Computer Science and Technology, Taiyuan Normal University, Taiyuan 030000, China. [2]Shanxi Institute of Energy, Taiyuan 030000, China. ✉email: mu_xiao_fang@163.com

In the object localization stage of our proposed improved algorithm, we employ the YOLOv8[24] object detection algorithm. Building upon previous YOLO algorithms, YOLOv8 features a redesigned C2f module, which efficiently aggregates cross-stage local network convolution blocks. Additionally, it adopts a decoupled head structure, with separate branches for classification and detection heads, facilitating high-precision object detection. However, we found that occlusion leads to false negatives and false positives in YOLOv8 detections. Therefore, we combine the coordinate attention (CA) mechanism[25] to propose the CASPPFC module, and combine it with improved EfficientViT[26] to enhance the YOLOv8 backbone network, further strengthening detection performance.

In order to achieve high-precision multi-object tracking. The DeepSORT algorithm[7] incorporates deep learning-based re-identification (Re-ID) appearance information. The StrongSORT algorithm[8] introduces mechanisms such as appearanceless association model and GSI. The OcSORT algorithm[9] proposes a simple motion model to address ID switch issues. However, in practical scenarios, significant occlusion between objects leads to frequent target identity ID switches in the aforementioned algorithms. In response to the issues above, the ByteTrack algorithm[10] ingeniously designs target box confidence grading and a two-stage matching strategy. By fully considering the impact of low-scoring detection boxes caused by occlusion, blurring, and other issues, this strategy enhances the robustness and accuracy of object tracking. To further optimize the ID switch issue caused by occlusion in ByteTrack and achieve high-precision multi-object tracking, we propose improvements in two stages of ByteTrack. In the first stage of association, we enhance the OSNet network[27] to introduce the OSNet-CA network as the Re-ID feature extraction method, which more effectively captures target information. In the second stage of association, we adopt the EIoU[28] improvement method to comprehensively consider the positional relationships between targets.

By combining the YOLOv8 object detector and the ByteTrack tracker, we propose an improved multi-object tracking model by enhancing both the YOLOv8 backbone network and the two-stage association process in ByteTrack. This approach achieves high-precision pedestrian detection and tracking, effectively reducing ID switches, and improving tracking robustness.

Based on the description provided, the main contributions of the proposed network in this paper include:

- The utilization of the improved EfficientViT to enhance the YOLOv8 backbone network aims to provide the network with better contextual awareness, enabling more accurate object detection and recognition.
- Drawing inspiration from the SPPCSPC structure, we enhance the SPPF structure in YOLOv8 while incorporating a lightweight CA mechanism, resulting in the proposed CASPPFC module. This new module improves the feature extraction capability of the network without significantly increasing model complexity.
- Improved the ByteTrack tracking algorithm. In the first stage of association, the OSNet network is enhanced using CA, resulting in the proposed OSNet-CA model. This model serves as a Re-ID feature extraction method, improving the IoU similarity calculation method. In the second stage of association, the EIoU improvement method is adopted.
- A new multi-object tracking algorithm combining improved YOLOv8 and improved ByteTrack is proposed, and performance comparisons are conducted against state-of-the-art tracking algorithms on the MOT17 and MOT20 test sets.

Related work

EfficientViT

The YOLOv8 backbone network extracts image features using multiple convolutional networks but lacks long-range dependencies. Addressing this issue, the vision transformer (ViT)[29] introduces the self-attention mechanism of Transformer[30] to model the global dependencies of the image. EfficientViT builds upon ViT by utilizing ReLU linear attention[31] instead of softmax attention to achieve a global receptive field, making it more adaptable to objects of different scales, shapes, and contextual information. This improvement enhances computational efficiency in high-resolution dense prediction tasks and enables more comprehensive feature extraction. Therefore, we employ EfficientViT to enhance the YOLOv8 backbone network, providing excellent contextual awareness and reducing the probabilities of both false negatives and false positives.

Spatial pyramid pooling

The role of spatial pyramid pooling (SPP)[32] is to provide multi-scale object feature extraction capabilities, effectively mitigating image distortion issues caused by image region cropping and scaling operations. In YOLOv8, the SPPF module improves upon SPP by concatenating multiple max-pooling layers to enhance accuracy while speeding up computation. However, using only max-pooling operations for feature extraction in SPPF can lead to loss of some local information. We draw inspiration from the SPPCSPC structure in the YOLOv7 model. By incorporating the idea and design of the SPPF structure in parallel with conventional convolutions, we propose a novel structure called CASPPFC. This enhances the receptive field for detecting targets of different sizes, effectively reducing local information loss and strengthening the feature extraction capability for multi-scale targets.

Attention mechanism

To enhance the performance of neural networks in object detection tasks, attention mechanisms are widely employed. For example, the squeeze-and-excitation (SE) attention[33] focuses solely on inter-channel information, while attempts to extract positional attention information through convolution operations are made by the bottleneck attention module (BAM)[34] and convolutional block attention module (CBAM)[35]. However, convolution is limited to extracting local relationships, restricting its ability to extract long-range relationships. In contrast, the efficient CA mechanism embeds both horizontal and vertical positional information into channel

attention, avoiding information loss caused by converting feature tensors into a single feature vector through two-dimensional pooling. This allows the network to focus on a wide range of positional information. By introducing the CA mechanism into both YOLOv8 and Re-ID networks, we enable the network to concentrate more on target information, resulting in more accurate object localization and recognition.

Re-ID module

Unlike Kalman filtering, which predicts spatial information, the appearance information extracted by Re-ID models exhibits relatively stable consistency, thereby aiding in reducing ID switches. Most convolutional neural network-based Re-ID models[36–38] borrow from object classification frameworks. Some studies have introduced attention mechanisms[39,40], achieving significant results. OSNet, as a full-scale lightweight Re-ID model, decomposes standard convolution into point convolution and depth convolution and designs a unified aggregation gate to dynamically fuse features of different scales, enabling more comprehensive and effective feature extraction. In the first stage of association in ByteTrack, similarity calculation is performed solely based on IoU, leading to excessive ID switches. To address this, we integrate the CA mechanism into OSNet, proposing the OSNet-CA network. This approach allows for more flexible extraction of pedestrian Re-ID feature information at different scales, thereby achieving more accurate target matching.

IoU

Considering the relative position and shape of bounding boxes helps improve the accuracy of bounding box matching, thereby enhancing overall tracking performance. When the predicted box and the ground truth box do not intersect, IoU fails to reflect their relative position. To address this, GIoU[41] introduces the minimum enclosing rectangle, while CIoU[42] regresses the Euclidean distance between the centers of two boxes and adds an aspect ratio penalty term. Further considering the shape of bounding boxes, EIoU splits the influence factor of aspect ratio into separate calculations for the length and width of the predicted and ground truth boxes. By combining IoU loss, center distance loss, width loss, and height loss, EIoU fully incorporates the effects of bounding box shape and relative position. Therefore, in the second stage of association in ByteTrack, we adopt EIoU to improve the IoU similarity calculation method, providing more accurate metrics for low-scoring box trajectory matching and enhancing overall tracking performance.

Proposed method

This paper proposes an improved multi-object tracking model based on the TBD multi-object tracking paradigm, integrating improved YOLOv8 and ByteTrack. In the detection stage, we combine the coordinate attention mechanism to propose the Coordinate Attention Spatial Pyramid Pooling - Fast Conv (CASPPFC) module, and combine it with improved Efficient Vision Transformer (EfficientViT) to enhance the YOLOv8 backbone network, effectively reducing false positives and false negatives caused by occlusion. In the first stage of tracking association, we propose the Omni-Scale Network-Coordinate Attention (OSNet-CA) network as the Re-identification (Re-ID) feature extraction method to capture target information more effectively. In the second stage of association, we adopt the Efficient Intersection over Union (EIoU) improvement method to comprehensively consider the positional relationships between targets. The algorithmic architecture is illustrated in Fig. 1.

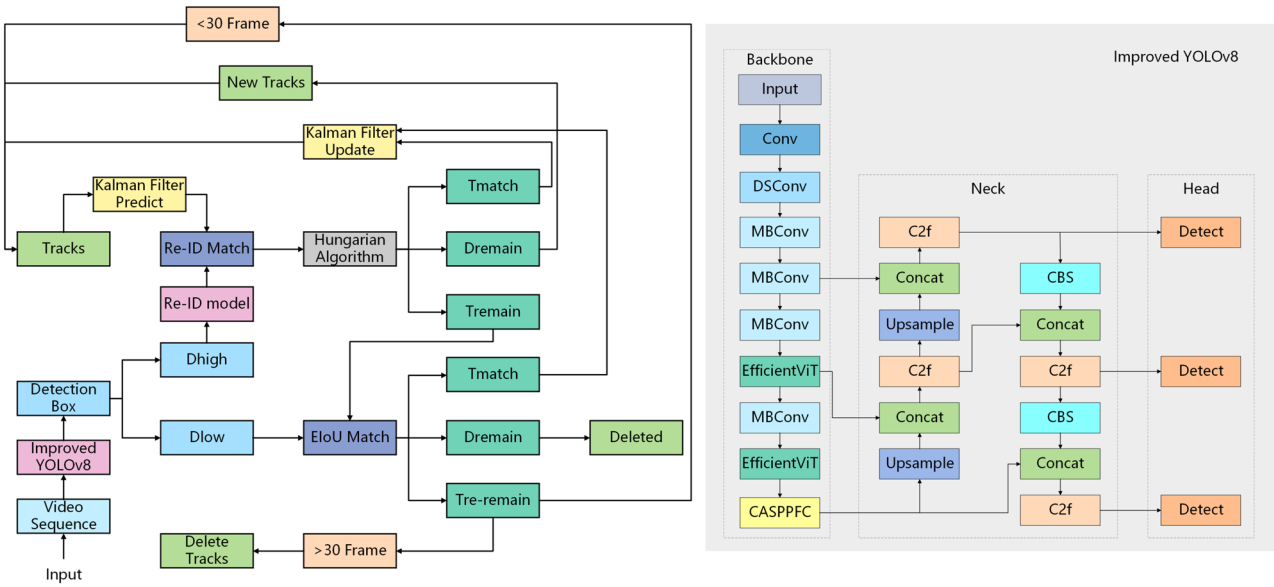

Fig. 1. Illustrates the structural diagram of a multi-object tracking model that integrates improved YOLOv8 and ByteTrack.

The video sequence is inputted into the improved YOLOv8 object detector, yielding detections categorized into high-score and low-score detection boxes based on their confidence thresholds. Features extracted from high-score boxes using a Re-ID model are matched with predicted trajectories obtained through Kalman filtering using similarity calculations. Matching is achieved through the Hungarian algorithm, resulting in three scenarios: matched trajectories undergo Kalman filter updates, unmatched high-score detection boxes spawn new trajectories, and unmatched trajectories remain intact. Subsequently, low-score boxes are compared with unmatched trajectories using EIoU similarity computation, leading to three outcomes: matched trajectories undergo Kalman filter updates, unmatched low-score detection boxes are removed, and unmatched trajectories persist if their duration is less than 30 frames; otherwise, they are deleted.

In the detection process, EfficientViT and the CASPPFC structure were employed to improve the YOLOv8 backbone network because EfficientViT, based on the ViT architecture, replaces the traditional softmax attention with ReLU linear attention to achieve efficient modeling of the global receptive field. This improvement enables the model to better adapt to targets of varying scales, shapes, and contextual information, significantly enhancing computational efficiency and feature representation in high-resolution dense prediction tasks, thereby strengthening contextual awareness and effectively reducing missed and false detections. The CASPPFC structure, by expanding the receptive field, facilitates the detection of targets of various sizes, effectively reducing local information loss and enhancing multi-scale feature extraction. During tracking, OSNet, a lightweight full-scale Re-ID model, innovatively decomposes standard convolutions into pointwise and depthwise convolutions and designs a unified aggregation gate to dynamically fuse features of different scales, enabling more comprehensive target feature extraction. Combined with the channel attention (CA) mechanism, the model can more flexibly extract pedestrian Re-ID features at different scales, improving target matching accuracy. Furthermore, EIoU builds upon CIoU by separately calculating the width and height loss terms for the predicted and ground-truth boxes, decomposing the influence of aspect ratio. By integrating IoU loss, center distance loss, width loss, and height loss, EIoU effectively enhances the modeling of box shape and relative spatial relationships. We adopt EIoU to replace the traditional IoU similarity calculation in the second association stage of ByteTrack, providing a more precise metric for matching low-confidence boxes and significantly improving overall tracking performance.

In summary, the above technical innovations and integrations effectively address the detection challenges caused by occlusion and identity switching in multi-object tracking, significantly enhancing the model's robustness and accuracy.

The improved YOLOv8 object detection algorithm

In TBD multi-object tracking, the robustness of the detection algorithm is crucial. A low-performance detection algorithm may lead to inaccuracies in target identification and tracking by the tracker. Utilizing a high-performance detection algorithm is essential for improving tracking accuracy and robustness. Therefore, we employ the state-of-the-art YOLOv8 object detection algorithm and further enhance it to strengthen the network's feature extraction capability. The modified YOLOv8 network architecture is illustrated in Fig. 2.

Backbone network

The backbone network of YOLOv8 references the CSPDarkNet-53 network from YOLOv5, with the difference that YOLOv8 replaces the C3 module with the C2f module. We found that the C2f module, by employing deep convolutional neural networks for image feature extraction, can capture more gradient flow information. However, it has a smaller receptive field, making it difficult to capture semantic information from distant regions. Additionally, convolutional neural networks, by applying the same convolutional kernel at different positions in the image for weight sharing, struggle to accurately identify objects with varying scales or contextual information. On the other hand, EfficientViT models the global dependencies of the image, making it more suitable for objects with different scales, shapes, and contextual information. This enables more precise localization and discrimination of objects.

To adapt to the YOLOv8 backbone network, we have modified the EfficientViT model by discarding its head part while retaining its backbone. Additionally, we have integrated the original SPPF module from YOLOv8 to enhance the network's ability to extract multi-scale features. The improved EfficientViT model is illustrated in Fig. 3.

In the improved EfficientViT model, the input image to be detected is first passed through regular convolution and DSConv modules to feed the feature maps into the network. Then, MBConv modules are stacked to extract features and reduce the parameters during the convolution process. The EfficientViT model is utilized to extract multi-layer feature information for effective feature recognition and analysis. Finally, the SPPF module is employed to extract multi-scale features. The EfficientViT Module consists of a lightweight multi-scale attention (Lightweight MSA) module and an MBConv. The Lightweight MSA module captures global information, while the MBConv captures local information. The core feature of the improved EfficientViT model lies in the Lightweight MSA's use of ReLU linear attention instead of softmax attention to achieve a global receptive field. This design maintains lightweight characteristics while providing more accurate localization and object discrimination capabilities.

The similarity function in MSA attention:

$$\mathrm{Sim}(Q, K) = \mathrm{ReLU}(Q)\,\mathrm{ReLU}(K)^T \tag{1}$$

The corresponding attention expression is:

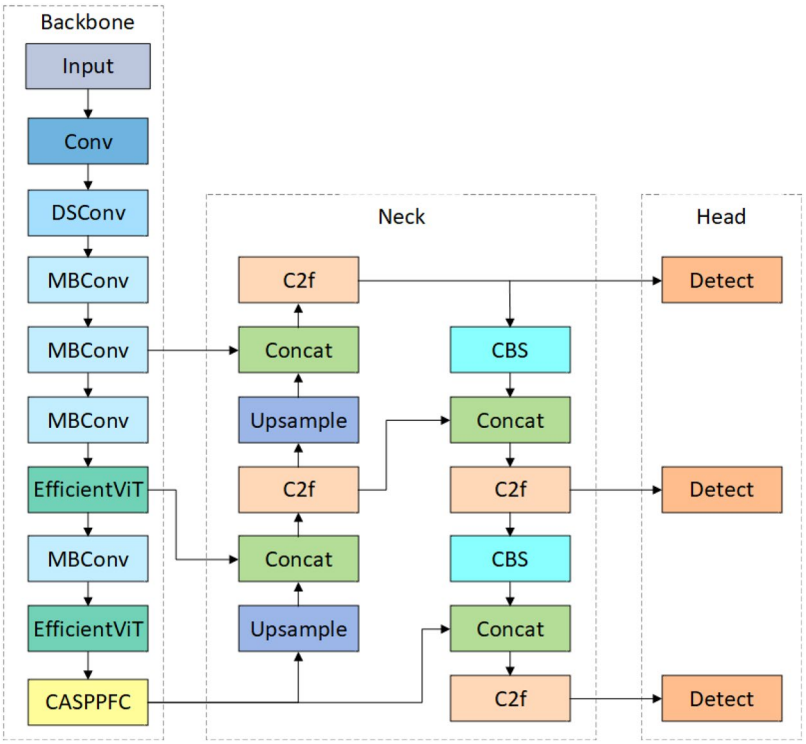

Fig. 2. Improved YOLOv8 network architecture diagram.

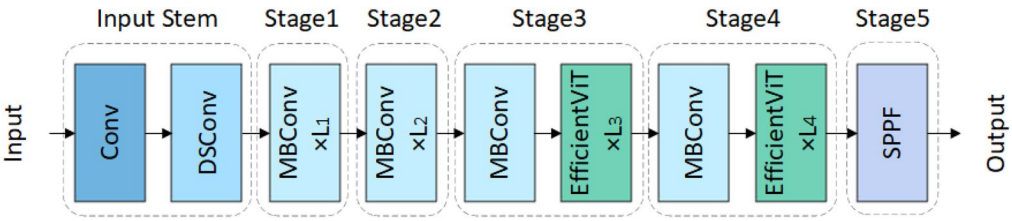

Fig. 3. Structure of the improved EfficientViT model.

$$O_i = \frac{(\mathrm{ReLU}\,(Q_i)) \sum_{j=1}^{N} \mathrm{ReLU}\,(K_j)^T V_j}{\mathrm{ReLU}\,(Q_i) \left(\sum_{j=1}^{N} \mathrm{ReLU}\,(K_j)^T \right)} \tag{2}$$

According to the above formula, it is only necessary to compute $\sum_{j=1}^{N} \mathrm{ReLU}\,(K_j)^T V_j$ and $\mathrm{ReLU}\,(K_j)^T$ once, thereby reducing time complexity and space complexity. The input sequence XX is divided into multiple heads, each with corresponding matrices QQ, KK and VV. Different-sized convolutions are used to aggregate the QQ, KK and VV matrices, enabling the MSA module to have multi-scale features. The structure is illustrated in Fig. 4.

This illustrates that the improved EfficientViT combines the advantages of both CNN and Transformer structures. As the backbone network of YOLOv8, its convolutional neural network part retains the inductive bias characteristics, accelerating network convergence. The Transformer structure enables the model to establish long-range global dependencies in images, enhancing the network's feature extraction capabilities.

CASPPFC

The SPPF module employs three 5×5 small-sized pooling kernels cascaded instead of a single large-sized pooling kernel as in the SPP module. This further improves the running speed while enriching the feature map's expressive power by merging features from different receptive fields. The SPPF module is depicted in Fig. 5.

Although SPPF achieves the fusion of local and global features, we found that using only max-pooling operations for feature extraction may lead to partial loss of local information.

We borrow from the SPPCSPC structure by dividing the input feature map into two branches: one utilizing conventional convolution and the other utilizing the SPPF structure. This approach enriches the expressive

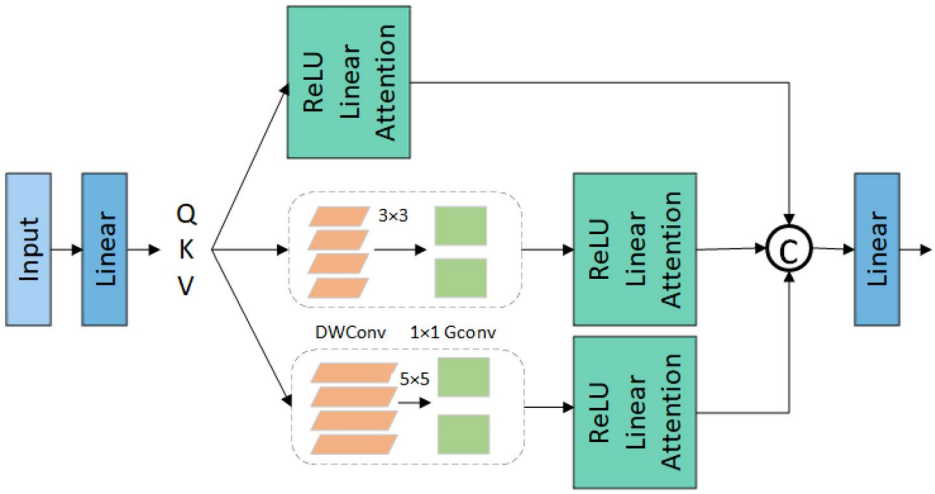

Fig. 4. Structure of the lightweight MSA.

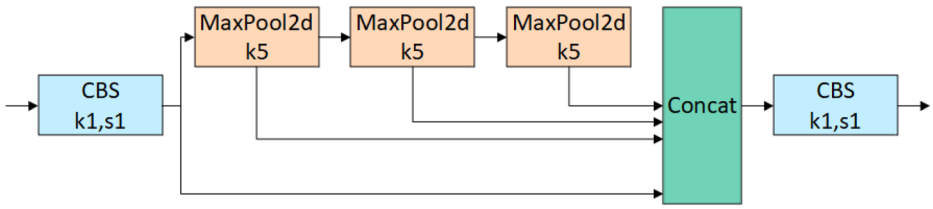

Fig. 5. SPPF module diagram.

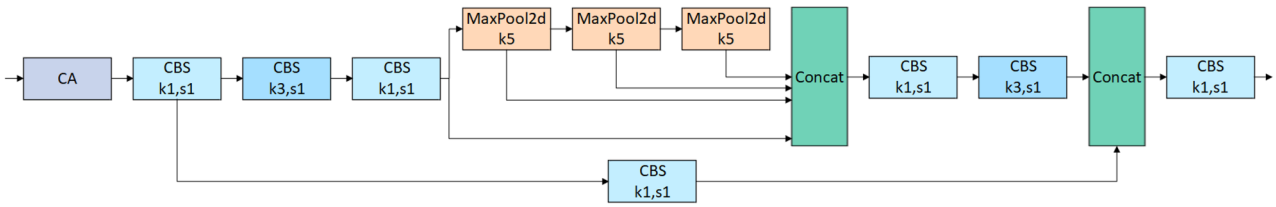

Fig. 6. CASPPFC module diagram.

power of the feature map based on merging features from different receptive fields while addressing the issue of partial feature information loss. Additionally, we incorporate a lightweight CA mechanism to encode both horizontal and vertical positional information into channel attention, enabling the network to ignore irrelevant background interference and focus on more effective personnel feature information. This structure not only avoids local information loss but also achieves better multi-scale feature extraction. We name this new module the CASPPFC module, as illustrated in Fig. 6.

As shown in Fig. 6, the SPPF component is retained as an independent branch to capture semantic features at multiple scales, while the convolutional branch supplements it with finer spatial detail. This dual-branch design, combined with attention-guided fusion, enables the CASPPFC module to perform more robust and comprehensive multi-scale feature extraction. As a result, it contributes significantly to improving detection accuracy in complex scenes with dense targets or background noise.

The CA mechanism used in the CASPPFC module is illustrated in Fig. 7.

The core idea of this mechanism is to decompose the input features into two one-dimensional features, aggregating feature information along the and directions separately. By capturing spatially distant dependencies, it can obtain positional structural information in another direction. Ultimately, the position information of candidate boxes is encoded into channel attention, avoiding information loss caused by converting the feature tensor into a single feature vector through 2D pooling. This allows the network to focus on extensive positional information. Based on this idea, we incorporate the CA mechanism before the improved spatial feature pyramid module. Experimental results demonstrate that introducing the CA mechanism can effectively improve the detection performance of the model without increasing computational overhead.

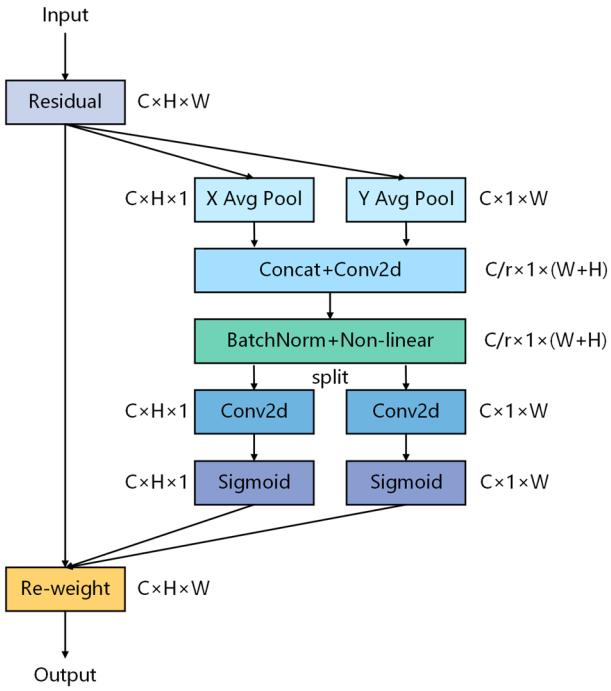

Fig. 7. Illustration of the CA mechanism.

The improved ByteTrack multi-object tracking algorithm

ByteTrack has devised target box confidence ranking and a two-stage matching strategy, enhancing the accuracy of object tracking. However, we observed that using only IoU for similarity calculation leads to excessively high ID switches. We conducted an analysis of the two-stage similarity calculation method and combined it with Re-ID and EIoU improvement methods to enhance the ByteTrack tracker. This effectively reduces ID switches and improves the algorithm's accuracy and robustness. The schematic diagram of the improved ByteTrack algorithm is presented in Fig. 8.

OSNet-CA model

In the first stage association of the ByteTrack multi-object tracking algorithm, only IoU is used to initially match the detection results with the Kalman filter prediction results. If the IoU value between two boxes is higher than a set threshold, they are considered the same target. While this method is simple, it can lead to ID switches in cases of target occlusion or sudden changes in motion state. We found that unlike the spatial information predicted by the Kalman filter, the appearance information extracted by the Re-ID model exhibits relatively stable consistency throughout the entire video, thus aiding long-term association. Therefore, we improved the OSNet network as the Re-ID model to extract appearance information, representing Re-ID features as feature vectors. Subsequently, we calculate the distance between these feature vectors to measure the similarity between targets, thereby improving the accuracy and robustness of multi-object tracking in situations involving target occlusion.

In terms of network architecture, the overall structure of OSNet consists of five layers, composed of stacked OSBlocks and pooling layers. OSBlocks utilize depthwise separable convolutions to construct the Lite 3×3 module. This strategy significantly reduces the model's parameter and computational complexity while effectively learning spatial channel correlations and avoiding overfitting issues. Additionally, OSBlocks employ AG unified aggregation gates to dynamically fuse features from different scales. We found that this design allows the network to adapt more flexibly to pedestrian features at different scales. However, sometimes irrelevant background factors can introduce interference, affecting feature extraction results.The OSBlock structure diagram is shown in Fig. 9.

To reduce the interference of irrelevant background factors and allow the model to focus more selectively on the interesting parts of the image, we introduce the CA mechanism after each stage of the OSBlock, proposing the OSNet-CA network. The specific structure is shown in Table 1.

In this structure, a total of three CA attention mechanisms are added. This innovation enhances the model's ability to capture key areas in pedestrian images without introducing excessive additional computational burden, thereby making the matching process more discriminative and robust.

EIoU

In the second stage association of the ByteTrack multi-object tracking algorithm, when associating the same target across frames, similarity calculation is performed between the predicted trajectory boxes and the detection boxes. At this point, it is necessary to compute the cost matrix using IoU operations.

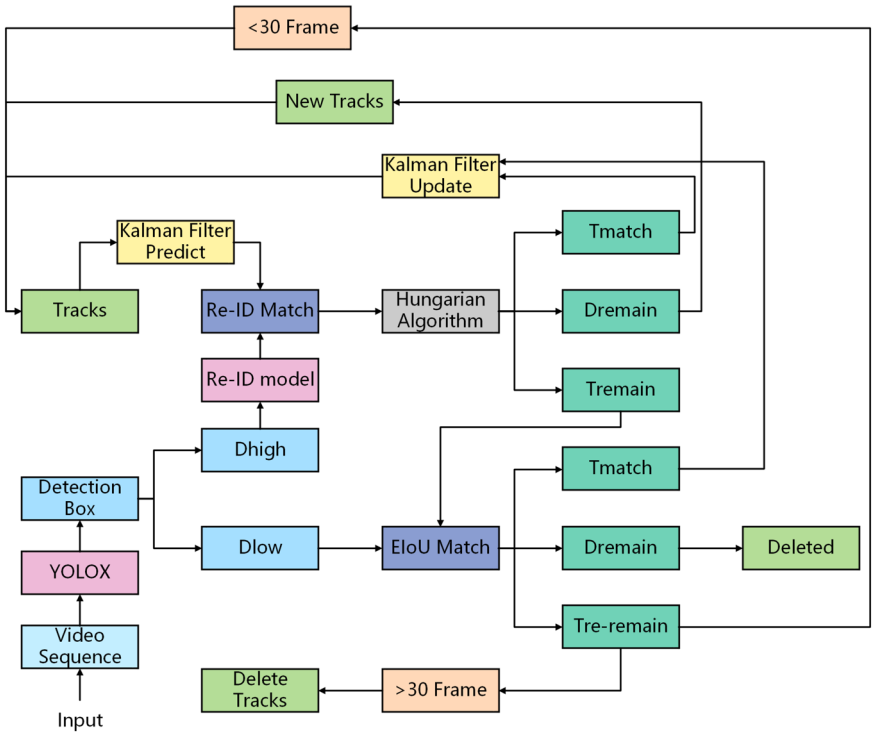

Fig. 8. Schematic diagram of the improved ByteTrack algorithm.

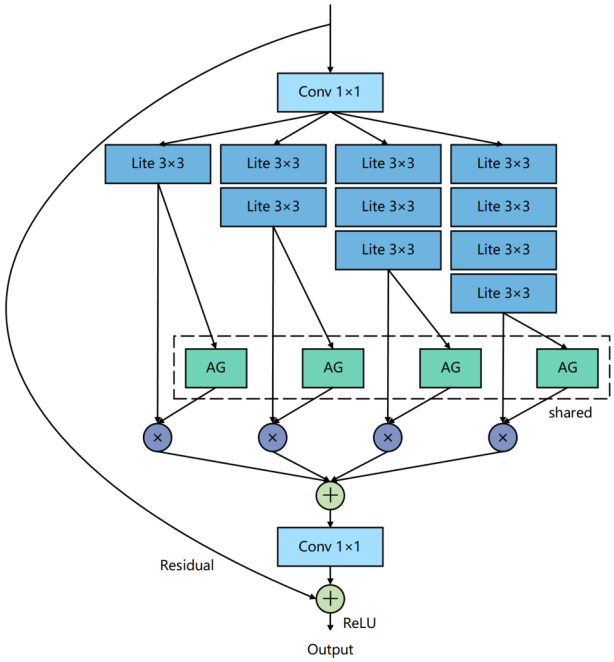

Fig. 9. OSBlock structure diagram.

$$iou = \frac{|A \cap B|}{|A \cup B|} \tag{3}$$

$$\text{cost}_{matrix} = 1 - iou \tag{4}$$

We consider two issues when using IoU similarity calculation in the second association of low-score detection boxes containing severe occlusions or motion blur: when the detection box and the trajectory box do not

Layer	Stage	OSNet
Layer1	Conv1	7×7 Conv 3×3 Max Pooling
Layer2	Conv2	OSBlock×2 CA Block
	Transition	1×1 Conv 2×2 Average Pooling
Layer3	Conv3	OSBlock×2 CA Block
	Transition	1×1 Conv 2×2 Average Pooling
Layer4	Conv4	OSBlock×2 CA Block
Layer5	Conv5	1×1 Conv

Table 1. OSNet-CA network architecture.

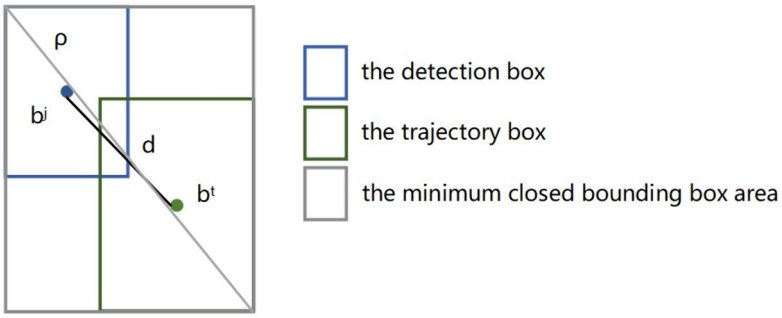

Fig. 10. Illustration of EIoU.

intersect, i.e., $IoU(A, B) = 0$, it fails to reflect the distance between A and B; when IoU values are the same, it does not reflect how A and B intersect. Accurately measuring the overlap between trajectory boxes and detection boxes is crucial for improving the accuracy of object tracking. To address the issues with IoU, we use EIoU as a replacement for IoU to compute the distance metric between target boxes. EIoU is illustrated in Fig. 10.

d represents the distance between the center points of the trajectory box and the detection box. b^t represents the predicted center coordinates of the trajectory box. b^j represents the predicted center coordinates of the detection box. ρ represents the predicted center coordinates of the detection box. ρ represents the diagonal distance of the minimum closed bounding box area of the trajectory box and the detection box. w^t represents the width of the predicted trajectory box. w^j represents the width of the detection box. h^t represents the height of the predicted trajectory box. h^j represents the height of the detection box. ρ_w represents the width of the minimum closed bounding box area. ρ_h represents the height of the minimum closed bounding box area.

The formula for calculating EIoU is as follows:

$$EIoU = IoU - \frac{d^2\left(b^t, b^j\right)}{\rho^2} - \frac{d^2\left(w^t, w^j\right)}{\rho_w^2} - \frac{d^2\left(h^t, h^j\right)}{\rho_h^2} \tag{5}$$

The EIoU directly regresses the Euclidean distance between the center points of the two boxes, while separately calculating the length and width of the predicted and ground truth boxes as penalty terms. By combining the IoU loss, center distance loss, width loss, and height loss, this method fully considers the effects of box shape and relative position relationship. Experimental results demonstrate that this improved approach enhances the accuracy of bounding box matching, thereby improving the overall tracking performance.

Experiments

Experimental settings

Configuration

The model is based on the PyTorch framework and trained using GPU. The GPU used for experiments is the NVIDIA Tesla T4, with CUDA version 11.1, PyTorch version 1.9.1, and Python version 3.8. The CPU is Intel(R) Xeon(R) Gold 5218 CPU @ 2.30GHz, and the operating system is Windows 10 Professional.

Datasets

The object detection dataset used in the experiment is CoCo2017[43], containing a total of 163,957 images, with 118,287 images in the training set, 5000 images in the validation set, and 40,670 images in the test set. The

dataset includes 80 categories, covering objects of various sizes and scenes. Input image size is 640×640, with the experiment running for 100 epochs and a batch size of 8. The SGD optimizer was used, with an initial learning rate set to 0.01, momentum at 0.937, and a cosine annealing learning rate adjustment algorithm.

The appearance information extracted by the Re-ID model was tested using the Market1501[44] dataset, which was collected on the Tsinghua University campus and includes 1501 pedestrians. The training set contains 12,936 images, while the test set includes 19,732 images. Input image size is 256×128, with the experiment conducted over 100 epochs and a batch size of 16.

The multi-object tracking datasets used are MOT17[45] and MOT20[46]. The MOT17 dataset covers sequences of different difficulty levels, including dense objects, occlusions, and motion blur. The MOT20 dataset contains larger scale variations, more complex motion patterns, and more instances of object occlusions. The input image size is 1440×800. The training runs for 80 epochs using the SGD optimizer with an initial learning rate of 0.001, weight decay of 5×10^{-4}, and momentum of 0.9. In our study, to ensure consistency in experimental settings, we also set the EIoU matching threshold in the improved second association stage to 0.2. This threshold was chosen instead of a lower value based on a trade-off between retaining true targets and suppressing background noise (false positives). While low-confidence detections may include real targets, they also contain a large amount of background noise. Setting a relatively low, but not overly low, EIoU threshold (such as 0.2) helps strike a balance in two ways: it allows low-confidence detections to be effectively associated with unmatched trajectories, which may correspond to occluded targets; and it avoids excessive false matches, which could occur if the threshold were set too low (e.g., 0.1), thereby preserving tracking accuracy. If the EIoU between the detection box and the trajectory box is less than 0.2, the matching will be rejected.

Metrics

The evaluation metrics for object detection[47] include the mean Average Precision (mAP), Params, and FLOPs. Here, mAP@0.5 indicates the mean precision at an Intersection over Union threshold of 0.5. The multi-object tracking benchmarks[48] cover the number of false positives (FP), the number of false negatives (FN), multiple object tracking accuracy (MOTA), identification F1-score (IDF1), higher order tracking accuracy (HOTA)[49], and frames per second (FPS). The IDF1 score reflects the association quality of the tracker, MOTA is mainly influenced by detection performance, and HOTA provides a comprehensive evaluation of the algorithm's performance.

Ablation study

YOLOv8 improvement methods

We conducted an ablation experiment on the COCO2017 dataset for object detection. The improved EfficientViT and CASPPFC modules were separately applied to the YOLOv8x model to assess the impact of each module on the network's performance. Subsequently, both modules were combined and used together in the YOLOv8x model to validate the efficiency of the proposed method, and the results were compared with the original detection model, Bytetrack YOLOX-x. The experimental results are shown in Table 2.

The results show that the improved model achieves a 0.5% increase in mAP@0.5 and a 2.9% improvement compared to the original YOLOX-x detection model. The improvements in the EfficientViT and CASPPFC modules enhance the network's ability to extract features from targets in occlusion scenarios.

To verify that the improved OSNet-CA, i.e., the Re-ID model, extracts more rich and accurate appearance information, we conducted detection experiments on the Market1501 dataset. The experimental results are shown in Table 3.

The results indicate that the improved OSNet-CA model achieves a 0.9% increase in mAP@0.5. It reduces the probability of false negatives and false positives in occlusion scenarios, focuses on the key regions of the target in the image, and extracts more rich and accurate feature information. This enhancement improves the network's tracking accuracy for the target.

ByteTrack improvement methods

We compared different types of similarity metrics by using the OSNet-CA network for feature extraction in the first stage association and the EIoU improvement method for similarity calculation in the second stage association. The validation was conducted on the MOT17 validation set (MOT17 first half of the train sequences). The experimental results are shown in Table 4.

The results indicate that on the MOT17 validation set, using OSNet-CA as similarity #1 yields better results compared to IoU, and using EIoU as similarity #2 also improves performance, especially in scenarios involving severe occlusions or low-score detection boxes with motion blur. Compared to using IoU for both similarity

Method	Size	mAP@0.5/%	Params/M	Flops/G
YOLOX-x[21]	640	51.5	99.1	281.9
YOLOv8x[24]	640	53.9	68.1	257.4
YOLOv10x[50]	640	54.4	**29.5**	**160.4**
YOLOv8x+EfficientViT	640	54.3	68.2	257.9
YOLOv8x+CASPPFC	640	54.1	68.2	257.5
YOLOv8x+EfficientViT+CASPPFC	**640**	**54.4**	68.2	257.9

Table 2. Ablation experiments of the improved YOLOv8 algorithm. Significant values are in [bold].

Method	Size	mAP@0.5/%	Params/M	Flops/G
OSNet[27]	640	94.2	**2.2**	**0.98**
OSNet-CA	**640**	**95.1**	2.4	0.99

Table 3. Experimental results of the improved Re-ID model. Significant values are in [bold].

Method	Similarity#1	Similarity#2	MOTA↑	IDF1↑	IDS↓
Byte	IoU	IoU	76.6	79.3	159
Byte	Re-ID(OSNet)	IoU	76.8	81	180
Byte	Re-ID(OSNet-CA)	IoU	77.2	81.2	147
Byte	IoU	EIoU	76.9	79.8	142
Byte	Re-ID(OSNet-CA)	EIoU	**77.6**	**81.5**	**131**

Table 4. Ablation experiments of the improved ByteTrack algorithm. Significant values are in [bold].

Tracker	MOTA↑	IDF1↑	HOTA↑	FP↓	FN↓	IDS↓	HS↑
SORT[7]	43.1	39.8	34.0	28398	287582	4852	**143.3**
CenterTrack[1]	67.8	64.7	52.2	18498	160332	3039	17.5
FairMOT[2]	73.7	72.3	59.3	27507	117477	3303	25.9
TransMOT[3]	76.7	75.1	61.7	36231	93150	2346	9.6
OCSORT[9]	78.0	77.5	63.2	**15129**	107055	1950	29.0
SFSORT[51]	78.8	74.4	61.7	30306	87024	2561	27.2
ByteTrack[10]	80.3	77.3	63.1	25491	**83721**	2196	29.6
UCMCTrack[52]	79.0	79.0	**64.3**	31669	85657	1434	31.3
Ours	**80.5**	**79.3**	64.2	23537	85359	**1376**	8.4

Table 5. Performance comparison of various algorithms on the MOT17 test set. Significant values are in [bold].

metrics, using Re-ID as similarity #1 and EIoU as similarity #2 results in a 1% increase in MOTA and a 2.2% increase in IDF1. This improvement method effectively captures target information, especially in scenarios with frequent target occlusion, leading to enhanced tracking accuracy.

Benchmark evaluation

MOT17

Using the improved YOLOv8 algorithm as the object detector and the improved ByteTrack algorithm as our tracker, we compared the performance against other currently popular multi-object tracking algorithms on the MOT17 test set. The experimental results are shown in Table 5.

The results indicate that our tracker outperforms other algorithms in most metrics, achieving 80.5% MOTA, 79.3% IDF1, and 64.2% HOTA. This tracking model enables high-precision pedestrian tracking and effectively reduces ID switches to enhance tracking robustness.

MOT20

Our improved algorithm is compared with other currently popular multi-object tracking algorithms on the MOT20 test set. The experimental results are shown in Table 6.

The results demonstrate that our tracker outperforms other mainstream tracking algorithms, particularly in scenarios with more target occlusion. Compared to the baseline ByteTrack tracking model, our tracker achieves a 1.7% improvement in IDF1, a 1.1% improvement in HOTA, and ultimately achieves 77.8% MOTA, 76.9% IDF1, and 62.4% HOTA. In different scenarios, the high IDF1 and MOTA scores indicate that our tracker is robust and effective.

Conclusion

In this paper, to address the challenges of multi-object tracking where occlusion impedes effective object detection and frequent identity switching occurs, we propose an improved MOT model based on the TBD paradigm. This model integrates YOLOv8 and ByteTrack with enhancements through EfficientViT, CASPPFC, OSNet-CA, and the EIoU method. During the detection stage, we introduce the CASPPFC module by incorporating the CA attention mechanism and improve the YOLOv8 backbone with EfficientViT, effectively reducing missed and false detections due to occlusion. In the first-stage association for tracking, we propose the OSNet-CA network as a Re-ID feature extraction method for more effective target information capture, while in the second-stage

Tracker	MOTA↑	IDF1↑	HOTA↑	FP↓	FN↓	IDS↓	[illegible]↑
SORT[7]	42.7	45.1	36.1	27521	264694	4470	**57.3**
FairMOT[2]	61.8	67.3	54.6	103440	88901	5243	13.2
TransTrack[4]	65.0	59.4	48.5	27197	150197	3608	7.2
MAATrack[5]	73.9	71.2	57.3	24942	108744	1331	14.7
OCSORT[9]	75.7	76.3	62.4	**19067**	105894	942	18.7
SFSORT[51]	75.0	73.5	60.9	21340	106943	1296	16.9
ByteTrack[10]	77.8	75.2	61.3	26249	**87594**	1223	17.5
UCMCTrack[52]	75.5	**77.4**	**62.8**	29322	96852	**813**	19.1
Ours	**77.8**	76.9	62.4	24652	89417	897	4.3

Table 6. Performance comparison of various algorithms on the MOT20 test set. Significant values are in [bold].

association, the EIoU method is applied to more comprehensively consider spatial relationships between targets. Experimental results show that our tracker outperforms existing popular algorithms on the MOT17 and MOT20 test sets, achieving high-precision pedestrian tracking, significantly reducing ID switches, and enhancing tracking robustness.

The CASPPFC module presented in this paper demonstrates an effective multi-scale feature extraction approach that improves detection accuracy in complex environments with limited visibility. Additionally, the improved EfficientViT structure introduces a novel method to optimize the backbone network of YOLO-series algorithms, which is essential for accurate detection in occlusion scenarios. In the first-stage association, we propose the OSNet-CA network as the Re-ID feature extraction method, while in the second-stage association, the EIoU method is employed. These contributions not only offer new insights into feature fusion and convolutional structure innovation in object detection but also provide a pathway for improving YOLO algorithm accuracy through modular optimizations. This approach addresses current limitations in multi-object tracking and can be applied to other computer vision tasks.

However, the model still has the following limitations: it integrates multiple modules, including the CASPPFC with CA attention mechanism, EfficientViT, OSNet-CA, and the EIoU method, resulting in a relatively complex overall structure. This significantly increases the number of parameters and computational cost, which may limit its real-time applicability on resource-constrained edge devices. Moreover, although the model performs well on the MOT17 and MOT20 datasets, its effectiveness has not been evaluated in drastically different environments, such as nighttime scenes, thermal imaging, or aerial views. The model also heavily relies on handcrafted module combinations, which may reduce its adaptability to scene variations in unseen domains. In future research, a key focus will be on further reducing network parameters and computational load while enhancing network performance and model generalization.

Data availability

The project code has been uploaded to Github (https://github.com/51ming/YOLOv8-ByteTrack). The data used in the article are publicly available at (https://cocodataset.org/#download) and (https://motchallenge.net/).

Received: 5 April 2025; Accepted: 14 August 2025
Published online: 26 August 2025

References

1. Zhou, X., Koltun, V. & Krähenbühl, P. Tracking objects as points. In *European Conference on Computer Vision* 474–490 (Springer, 2020).
2. Zhang, Y., Wang, C., Wang, X., Zeng, W. & Liu, W. Fairmot: On the fairness of detection and re-identification in multiple object tracking. *Int. J. Comput. Vis.* **129**, 3069–3087 (2021).
3. Chu, P., Wang, J., You, Q., Ling, H. & Liu, Z. Transmot: spatial-temporal graph transformer for multiple object tracking. In *Proceedings of the IEEE/CVF Winter Conference on applications of computer vision* 4870–4880 (2023).
4. Sun, P. et al. Transtrack: Multiple object tracking with transformer. arXiv preprint arXiv:2012.15460 (2020).
5. Stadler, D. & Beyerer, J. Modelling ambiguous assignments for multi-person tracking in crowds. In *Proceedings of the IEEE/CVF winter Conference on Applications of Computer Vision* 133–142 (2022).
6. Wan, J., Deng, J., Qiu, X. & Zhou, F. Body-face joint detection via embedding and head hook. In *Proceedings of the IEEE/CVF International Conference on Computer Vision* 2959–2968 (2021).
7. Bewley, A., Ge, Z., Ott, L., Ramos, F. & Upcroft, B. Simple online and realtime tracking. In *2016 IEEE International Conference on Image Processing (ICIP)* 3464–3468 (IEEE, 2016).
8. Wojke, N., Bewley, A. & Paulus, D. Simple online and realtime tracking with a deep association metric. In *2017 IEEE International Conference on Image Processing (ICIP)* 3645–3649 (IEEE, 2017).
9. Cao, J., Pang, J., Weng, X., Khirodkar, R. & Kitani, K. Observation-centric sort: Rethinking sort for robust multi-object tracking. In *Proceedings of the IEEE/CVF Conference on Computer Vision and Pattern Recognition* 9686–9696 (2023).
10. Zhang, Y. et al. Bytetrack: multi-object tracking by associating every detection box. In *European Conference on Computer Vision* 1–21 (Springer, 2022).
11. Du, Y. et al. Strongsort: make deepsort great again. *IEEE Trans. Multimedia* **25**, 8725–8737 (2023).
12. Andriluka, M., Roth, S. & Schiele, B. People-tracking-by-detection and people-detection-by-tracking. In *2008 IEEE Conference on Computer Vision and Pattern Recognition* 1–8 (IEEE, 2008).
13. Kalman, R. E. A new approach to linear filtering and prediction problems. *J. Basic Eng.* **82**, 35–45 (1960).

14. Kuhn, H. W. The hungarian method for the assignment problem. *Naval Res. Logist. Q.* **2**, 83–97 (1955).
15. Shi, P., Dong, X., Ge, R., Liu, Z. & Yang, A. Dp-m3d: monocular 3d object detection algorithm with depth perception capability. *Knowl.-Based Syst.* **318**, 113539 (2025).
16. Dong, X., Shi, P., Qi, H., Yang, A. & Liang, T. Ts-bev: Bev object detection algorithm based on temporal-spatial feature fusion. *Displays* **84**, 102814 (2024).
17. Dong, X., Shi, P., Liang, T. & Yang, A. Ctaffnet: Cnn-transformer adaptive feature fusion object detection algorithm for complex traffic scenarios. *Transp. Res. Rec.* **2679**, 1947–1965 (2025).
18. Redmon, J. & Farhadi, A. Yolov3: an incremental improvement. arXiv preprint arXiv:1804.02767 (2018).
19. Bochkovskiy, A., Wang, C.-Y. & Liao, H.-Y. M. Yolov4: optimal speed and accuracy of object detection. arXiv preprint arXiv:2004.10934 (2020).
20. Liu, Y., Jiang, B., He, H., Chen, Z. & Xu, Z. Helmet wearing detection algorithm based on improved yolov5. *Sci. Rep.* **14**, 8768 (2024).
21. Ge, Z., Liu, S., Wang, F., Li, Z. & Sun, J. Yolox: Exceeding yolo series in 2021. arXiv preprint arXiv:2107.08430 (2021).
22. Li, C. et al. Yolov6: a single-stage object detection framework for industrial applications. arXiv preprint arXiv:2209.02976 (2022).
23. Wang, C.-Y., Bochkovskiy, A. & Liao, H.-Y. M. Yolov7: Trainable bag-of-freebies sets new state-of-the-art for real-time object detectors. In *Proceedings of the IEEE/CVF Conference on Computer Vision and Pattern Recognition* 7464–7475 (2023).
24. Chu, Y., Yu, X. & Rong, X. A lightweight strip steel surface defect detection network based on improved yolov8. *Sens. (Basel, Switzerland)* **24**, 6495 (2024).
25. Hou, Q., Zhou, D. & Feng, J. Coordinate attention for efficient mobile network design. In *Proceedings of the IEEE/CVF Conference on Computer Vision and Pattern Recognition* 13713–13722 (2021).
26. Cai, H., Gan, C. & Han, S. Efficientvit: Enhanced linear attention for high-resolution low-computation visual recognition. arXiv preprint arXiv:2205.14756**3** (2022).
27. Zhou, K., Yang, Y., Cavallaro, A. & Xiang, T. Omni-scale feature learning for person re-identification. In *Proceedings of the IEEE/CVF International Conference on Computer Vision* 3702–3712 (2019).
28. Zhang, Y.-F. et al. Focal and efficient iou loss for accurate bounding box regression. *Neurocomputing* **506**, 146–157 (2022).
29. Dosovitskiy, A. et al. An image is worth 16x16 words: Transformers for image recognition at scale. arXiv preprint arXiv:2010.11929 (2020).
30. Vaswani, A. et al. Attention is all you need. *Adv. Neural Inf. Process. Syst.* **30**, 526 (2017).
31. Katharopoulos, A., Vyas, A., Pappas, N. & Fleuret, F. Transformers are rnns: Fast autoregressive transformers with linear attention. In *International Conference on Machine Learning* 5156–5165 (PMLR, 2020).
32. He, K., Zhang, X., Ren, S. & Sun, J. Spatial pyramid pooling in deep convolutional networks for visual recognition. *IEEE Trans. Pattern Anal. Mach. Intell.* **37**, 1904–1916 (2015).
33. Hu, J., Shen, L. & Sun, G. Squeeze-and-excitation networks. In *Proceedings of the IEEE Conference on Computer Vision and Pattern Recognition* 7132–7141 (2018).
34. Park, J., Woo, S., Lee, J.-Y. & Kweon, I. S. Bam: Bottleneck attention module. arXiv preprint arXiv:1807.06514 (2018).
35. Woo, S., Park, J., Lee, J.-Y. & Kweon, I. S. Cbam: convolutional block attention module. In *Proceedings of the European Conference on Computer Vision (ECCV)* 3–19 (2018).
36. Wang, Y., Chen, Z., Wu, F. & Wang, G. Person re-identification with cascaded pairwise convolutions. In *Proceedings of the IEEE Conference on Computer Vision and Pattern Recognition* 1470–1478 (2018).
37. Shen, Y., Xiao, T., Li, H., Yi, S. & Wang, X. End-to-end deep kronecker-product matching for person re-identification. In *Proceedings of the IEEE Conference on Computer Vision and Pattern Recognition* 6886–6895 (2018).
38. Guo, Y. & Cheung, N.-M. Efficient and deep person re-identification using multi-level similarity. In *Proceedings of the IEEE Conference on Computer Vision and Pattern Recognition* 2335–2344 (2018).
39. Si, J. et al. Dual attention matching network for context-aware feature sequence based person re-identification. In *Proceedings of the IEEE Conference on Computer Vision and Pattern Recognition* 5363–5372 (2018).
40. Song, C., Huang, Y., Ouyang, W. & Wang, L. Mask-guided contrastive attention model for person re-identification. In *Proceedings of the IEEE Conference on Computer Vision and Pattern Recognition* 1179–1188 (2018).
41. Rezatofighi, H. et al. Generalized intersection over union: A metric and a loss for bounding box regression. In *Proceedings of the IEEE/CVF conference on Computer Vision and Pattern Recognition* 658–666 (2019).
42. Zheng, Z. et al. Distance-iou loss: Faster and better learning for bounding box regression. In *Proceedings of the AAAI Conference on Artificial Intelligence, vol. 34* 12993–13000 (2020).
43. Milan, A., Leal-Taixé, L., Reid, I., Roth, S. & Schindler, K. Mot16: A benchmark for multi-object tracking. arXiv preprint arXiv:1603.00831 (2016).
44. Lin, T.-Y. et al. Microsoft coco: Common objects in context. In *Computer Vision–ECCV 2014: 13th European Conference, Zurich, Switzerland, September 6-12, 2014, Proceedings, Part V 13* 740–755 (Springer, 2014).
45. Zheng, L. et al. Scalable person re-identification: A benchmark. In *Proceedings of the IEEE International Conference on Computer Vision* 1116–1124 (2015).
46. Dendorfer, P. et al. Mot20: A benchmark for multi object tracking in crowded scenes. arXiv preprint arXiv:2003.09003 (2020).
47. Jiang, B., Luo, R., Mao, J., Xiao, T. & Jiang, Y. Acquisition of localization confidence for accurate object detection. In *Proceedings of the European Conference on Computer Vision (ECCV)* 784–799 (2018).
48. Ristani, E., Solera, F., Zou, R., Cucchiara, R. & Tomasi, C. Performance measures and a data set for multi-object multi-camera tracking. *ECCVW, 2016* .
49. Luiten, J. et al. Hota: a higher order metric for evaluating multi-object tracking. *Int. J. Comput. Vis.* **129**, 548–578 (2021).
50. Wang, A. et al. Yolov10: real-time end-to-end object detection. *Adv. Neural. Inf. Process. Syst.* **37**, 107984–108011 (2024).
51. Morsali, M. M. et al. Sfsort: Scene features-based simple online real-time tracker. arXiv preprint arXiv:2404.07553 (2024).
52. Yi, K. et al. Ucmctrack: multi-object tracking with uniform camera motion compensation. In *Proceedings of the AAAI Conference on Artificial Intelligence, vol. 38* 6702–6710 (2024).

Acknowledgements

This research was funded by the Shanxi Province Basic Research Program (Grant No. 202303021211187) and the Science and Technology Innovation Program for Higher Education Institutions in Shanxi Province (Grant No. 2022L403).

Author contributions

Conceptualization, Y.W. and X.M.; methodology, Y.W.; software, H.S.; validation, Y.W., X.M. and H.S.; formal analysis, M.H.; investigation, M.H.; resources, X.M.; data curation, H.S.; writing—original draft preparation, Y.W.; writing—review and editing, Y.W.; visualization, Y.W.; supervision, X.M.; project administration, X.M.; funding acquisition, X.M., M.H. All authors have read and agreed to the published version of the manuscript.

Funding
This research was funded by the Shanxi Province Basic Research Program (Grant No. 202303021211187) and the Science and Technology Innovation Program for Higher Education Institutions in Shanxi Province (Grant No. 2022L403).

Competing Interests
The authors declare no competing interests.

Additional information
Correspondence and requests for materials should be addressed to X.M.

Reprints and permissions information is available at www.nature.com/reprints.

Publisher's note Springer Nature remains neutral with regard to jurisdictional claims in published maps and institutional affiliations.

Open Access This article is licensed under a Creative Commons Attribution-NonCommercial-NoDerivatives 4.0 International License, which permits any non-commercial use, sharing, distribution and reproduction in any medium or format, as long as you give appropriate credit to the original author(s) and the source, provide a link to the Creative Commons licence, and indicate if you modified the licensed material. You do not have permission under this licence to share adapted material derived from this article or parts of it. The images or other third party material in this article are included in the article's Creative Commons licence, unless indicated otherwise in a credit line to the material. If material is not included in the article's Creative Commons licence and your intended use is not permitted by statutory regulation or exceeds the permitted use, you will need to obtain permission directly from the copyright holder. To view a copy of this licence, visit http://creativecommons.org/licenses/by-nc-nd/4.0/.

© The Author(s) 2025